VERSA BUILT ROBOTICS

VersaDoor

Installation & User Manual

Table of Contents

VersaDoor Overview

VersaDoor Design

VersaDoor is designed to be a simple, low-cost and easy to install door opener that can be adapted to a wide range of CNC machines. The VersaDoor uses common, low-cost pneumatic cylinders to actuate the door. Using articulated mounting points prevents binding of the cylinder that would decrease its life.

Guarding

The VersaDoor does not include guarding. The VersaDoor is designed to limit the total force the door opener generates and the speed at which it actuates. The VersaDoor is designed to be mounted in a way that eliminates pinch points, entrapment and crushing possibilities. The safety of the VersaDoor is the responsibility of the installer who must ensure that all local, state and federal safety requirements are met. If guarding or other measures are determined to meet safety requirements, it is the responsibility of the installer to install.

VersaDoor Overview

VersaDoor Control

Although the VersaDoor can be controlled by CNC digital IO, the VersaDoor is typically actuated by IO signals controlled by an automation system. Unless the CNC was designed and built with an autodoor, the CNC will not be able to control the VersaDoor without a CNC program running. To get a CNC program running, the CNC door will need to be closed. This creates a chicken before the egg problem.

By using the automation system to control the VersaDoor, the automation system will close the CNC door and then the CNC can be cycle-started by the automation system. When the automation system is signaled by the CNC that the program cycle is complete, the automation system can open the CNC door to service the CNC.

When the automation system is powered off or disconnected, the VersaDoor can easily be opened or closed by an operator using the handle on the CNC door.

VersaDoor Overview

CNC Door Sensor Kit

The VersaDoor does not include sensors to detect when the door is open and when the door is closed. VersaBuilt has a CNC Door Sensor kit available that can be integrated with the CNC, VersaDoor and the automation to provide better control of the VersaDoor. With the CNC Door Sensor kit, the automation system can be sure the door is open or closed before continuing processing preventing potential damage the automation system may cause if it tries to enter the CNC without the CNC door fully open.

Cycle times can also be reduced with the CNC Door Sensor kit. Instead of waiting a fixed amount of time to be sure the door is open or closed, the automation system can react as soon as it senses the door state has changed.

Please note that the sensor kit is not required and most automation systems will not significantly damage the CNC or the automation system if a collision is caused due to a door not being fully open. The cycle time reduction of the sensor kit is typically less than 5 seconds per operation.

Safety Warnings:

DANGER: The VersaDoor uses pneumatic energy to open and close a door. When installed, the VersaDoor has the potential to create at least pinching and entrapment hazards. Before installing the VersaDoor, perform a risk assessment of the VersaDoor installation in accordance with local, state and federal requirements. Before deployment, validate that the VersaDoor is installed according to these instructions including any additional requirements generated by the risk assessment.

WARNING: Before installing the VersaDoor, verify that the CNC is equipped with a functional door safety interlock. The door safety interlock should prevent the CNC from starting unless the door is closed and should prevent the door from opening while the CNC is running.

Safety

Recommended Safety Performance Specifications:

- *Maximum actuation speed: 6 inches per/second (150mm/sec)
- **Maximum air pressure for Door Close: 30 psi (2.0 bar), to control door close force. Actuation force at 30 psi (2.0 bar): 25 pound-force (110 Newton)
- ***Recommended air pressure for Door Open: 60 psi (4.0 bar), to control door open speed

* Speed is controlled by adjustable speed control fittings, attached at the cylinder ports. Use provided speed adjustment tool to increase or decrease door open/close speed

**Pressure for Door Close is set by the included, pre-set pressure regulator (QTY: 1) supplied for Door Close (with Red Tubing) and pre-set to 30 psi, with adjustment knob removed (requires tool to change).

***Pressure for Door Open is set by the included, pre-set pressure regulator (QTY: 1) supplied for Door Open (with Green Tubing) and pre-set to 60 psi, with adjustment knob removed (requires tool to change). Adjust pressure, as needed, to control door speed.

Safety

To prevent damage to VersaDoor components:

Verify correct orientation of pre-set regulators. Arrow points in direction of air lines to door opener

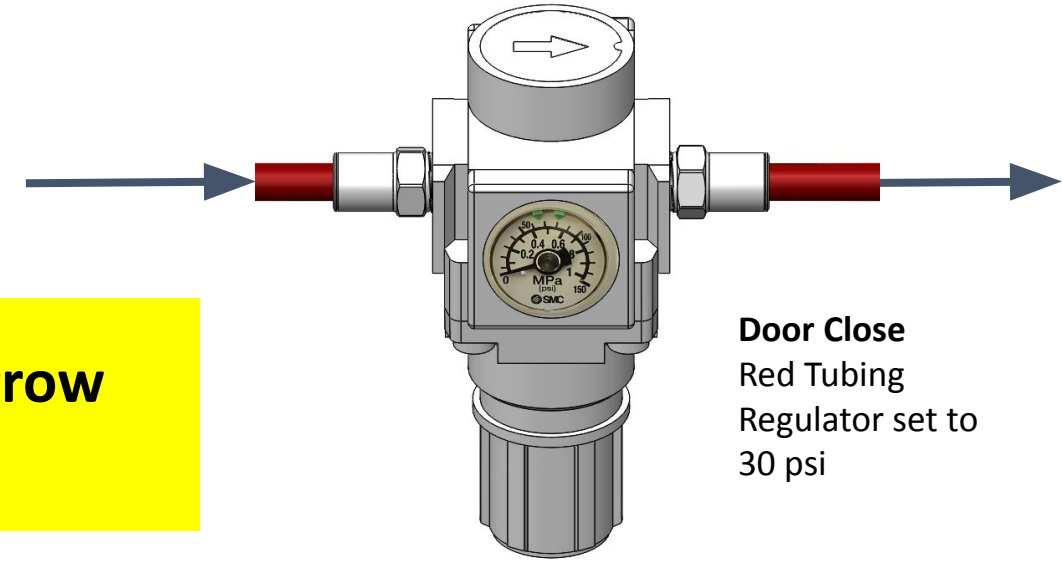

Door Close
Red Tubing
Regulator set to
30 psi

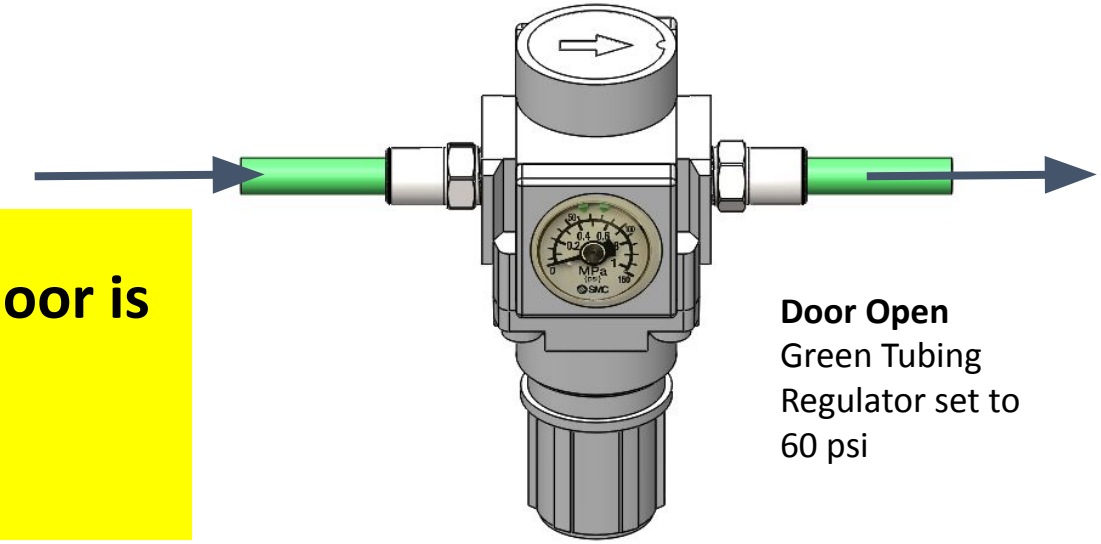

Door Open
Green Tubing
Regulator set to
60 psi

Do not push or pull on CNC Door or Actuator if door is jammed or stuck. Pushing or pulling can cause permanent damage to door cylinder.

In the Box

Notes:

1. Pneumatic Valve and CNC door sensor kit sold separately

2. Dual door includes a second pneumatic cylinder, with additional mounting brackets, hardware and fittings connecting a single pneumatic valve to open and close lines connected to T-fittings to control both actuators

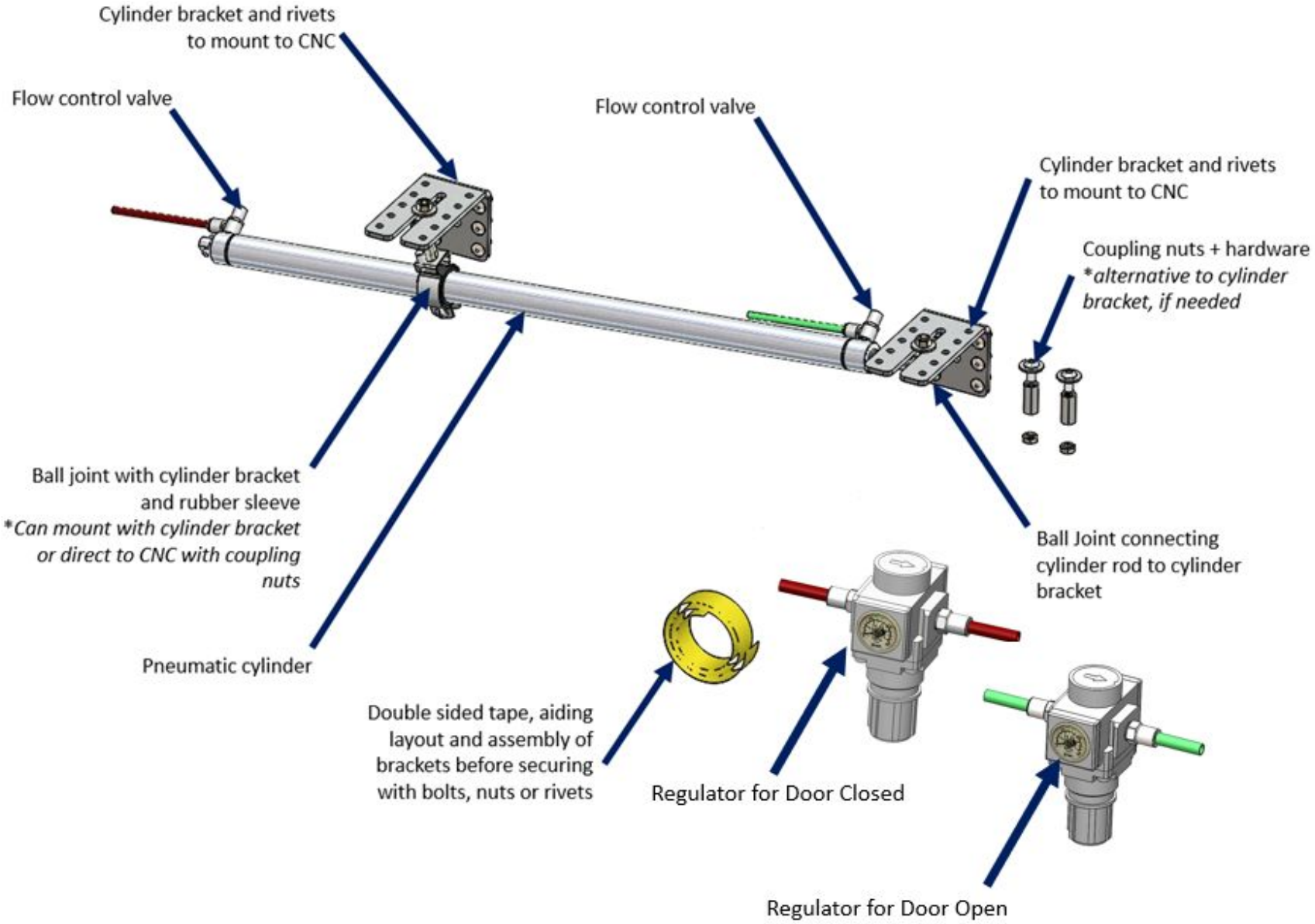

Pneumatic Valve Control (sold separately)

Notes:

1. VersaBuilt P/N 5005490 - VersaDoor Valve Kit (shown here) with Red wire = 24 VDC, Black wire = 0 VDC

2. VersaDoors must be used with 3 position valve with center exhaust

3. VSC and Robot2CNC Mill Edition and Lathe Edition panels (shown on following page) include VersaDoor valves

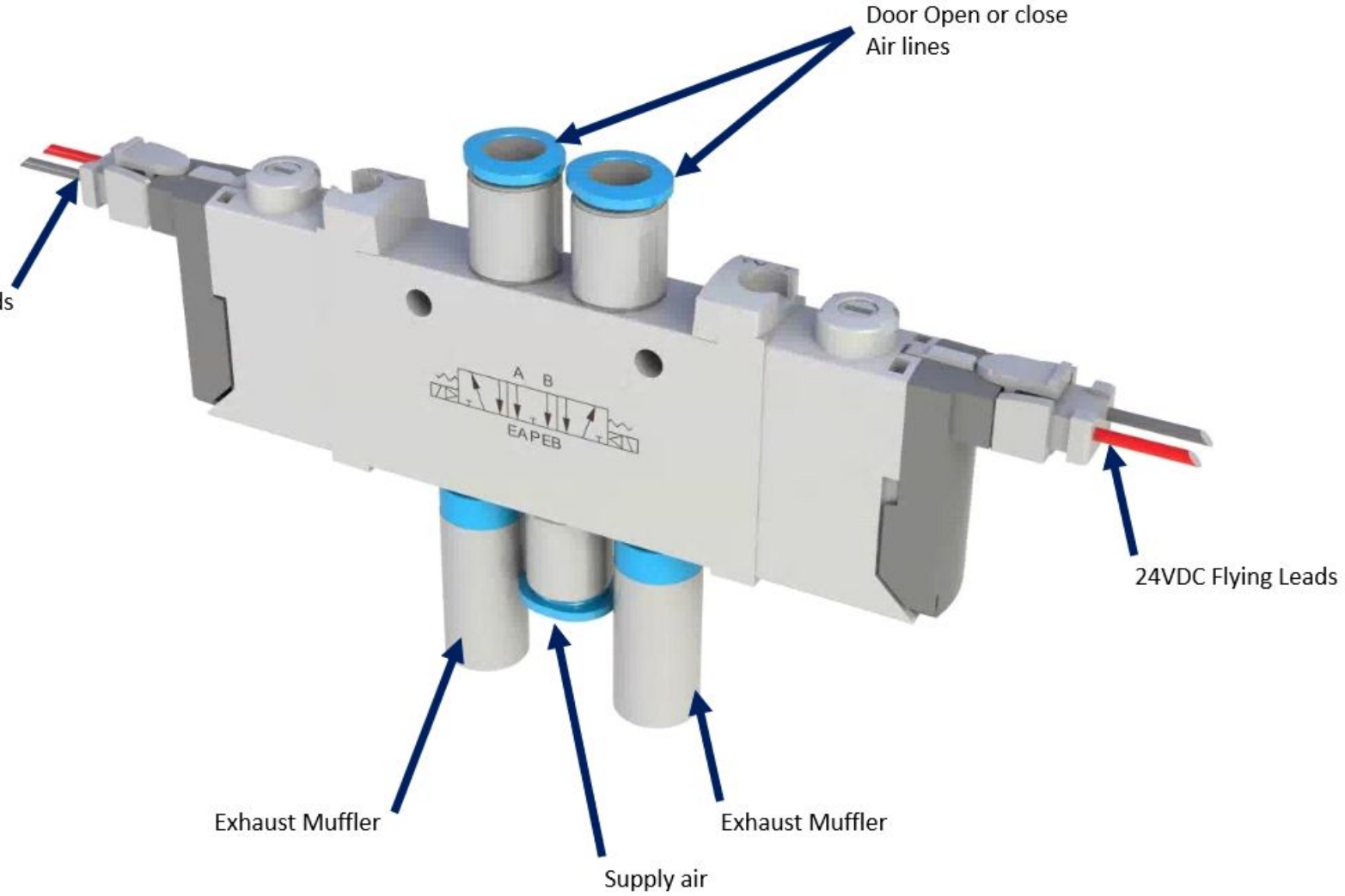

VSC/Robot2CNC Panel (sold separately)

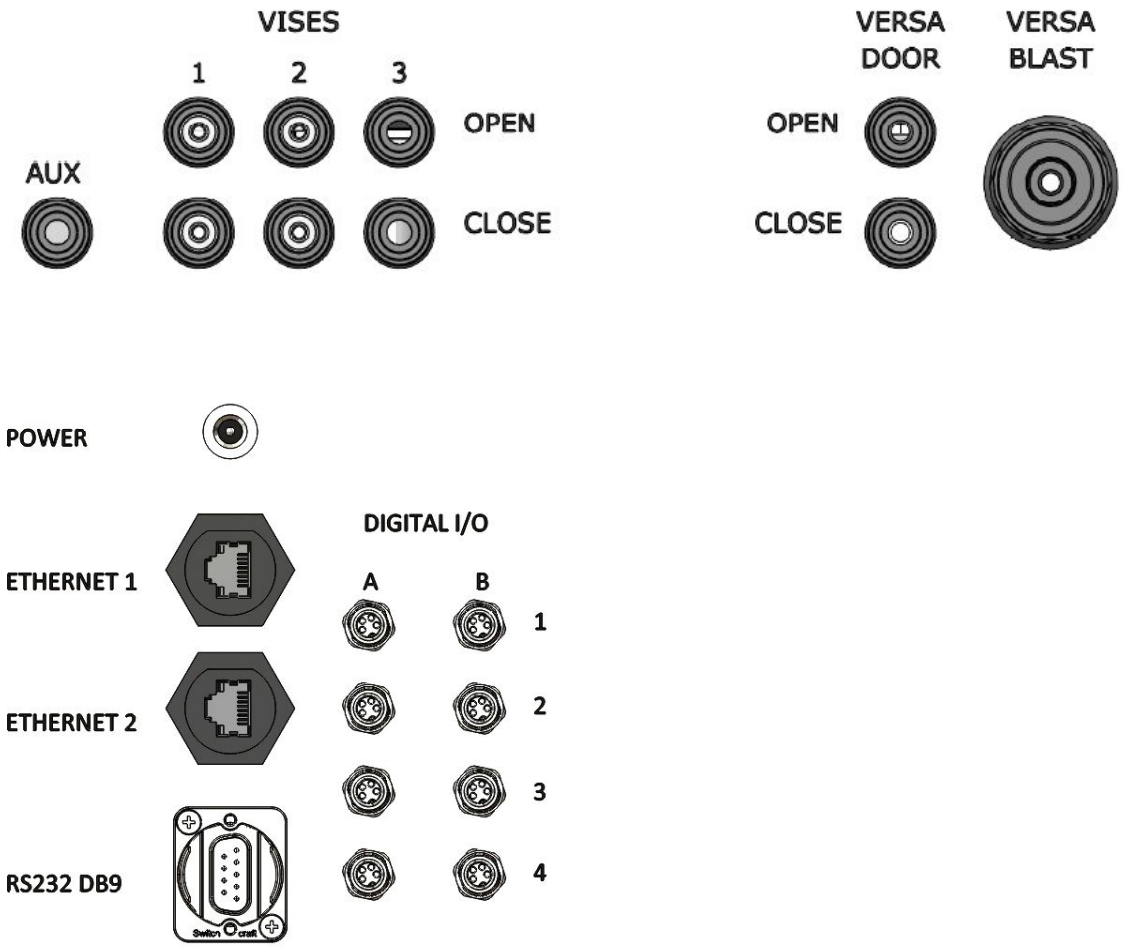

Notes:

1. VSC, Robot2CNC Mill Edition and Robot2CNC Lathe Edition include connections for VersaDoor pneumatic and sensor connections
2. Connect air lines to VersaDoor Open/Close ports shown above
3. Connect VersaDoor sensor cables to A3 for single doors; to A3 and A4 for double doors

CNC Sensor Kit (sold separately)

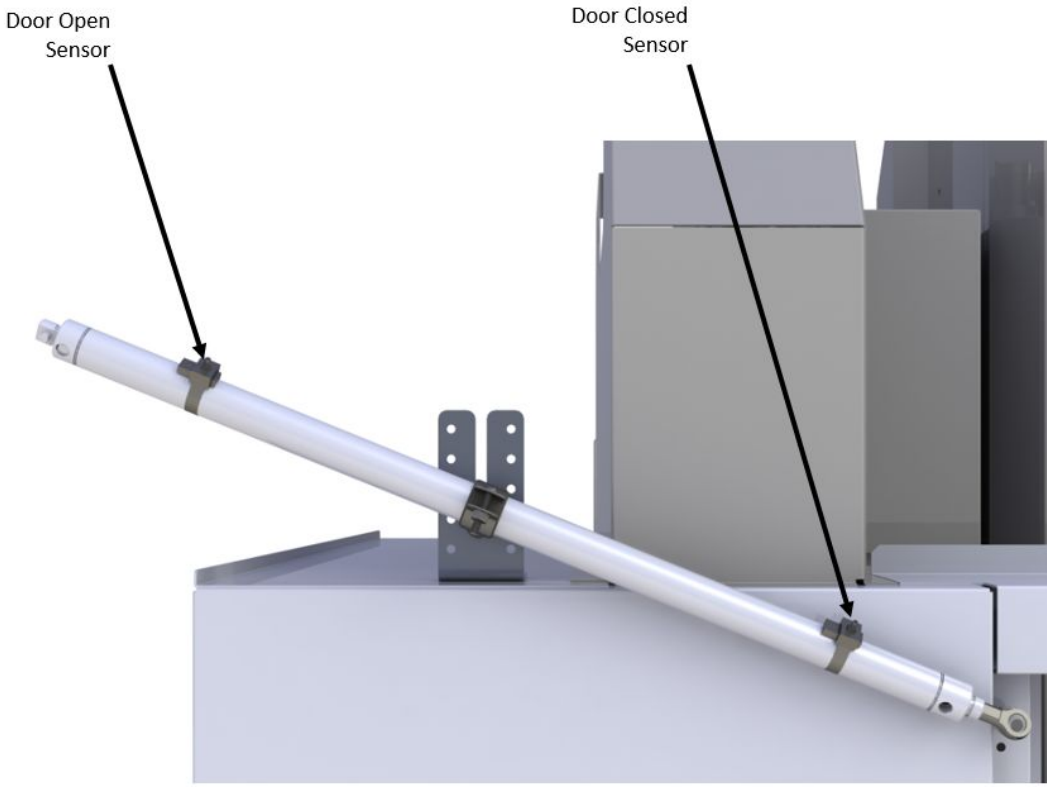

Notes:

1. VersaDoor Sensor Kit allows automation system to detect CNC door at the fully open or fully closed position

Required Tools and Supplies

Tools

- 7/16” Wrench
- 1/2” Wrench
- 3/16” Hex Key
- Philips Screwdriver
- Long-nose pliers
- Hand Drill
- 0.257-0.261” drill bit (for 1/4” rivet clearance)
- 0.31” clearance drill bit (for 5/16” coupling nut attachment)
- Rivet gun
- Marker
- Tape measure
- Tube cutters

Supplies

- Zip-ties
- Connection to shop air from ¼” tubing

Installation Steps

1. Loosely assembly the cylinder and brackets
2. Determine mounting location
3. Install Mounting Brackets onto CNC
4. Mount Pneumatic Cylinder onto brackets
5. Install and route Pneumatic tubing
6. Install Pneumatic Valves
7. Wire electrical signals
8. Validate performance and safety of VersaDoor

Assembly of Cylinder and Ball Joints

1. Tighten speed control fittings to cylinder with ½” wrench
2. Thread floating ball joint onto end of pneumatic cylinder, securing in place with jam nut with ½” wrench
3. Remove rubber liner from Fixed Ball Joint and slide over Pneumatic Cylinder
4. Attach Fixed Ball Joint to Pneumatic Cylinder as shown, in approximate center of cylinder length. Tighten into place with screwdriver and 7/16” wrench.
5. Floating ball joint is attached to cylinder at the Factory

**Refer to figure on following page*

<u>Note</u>: The Pneumatic cylinder can connect to the mounting brackets or coupling nuts in many different configurations. The optimal configuration may be different than what is shown and will be determined in the next steps.

Installation - Assembly of Cylinder and Ball Joints

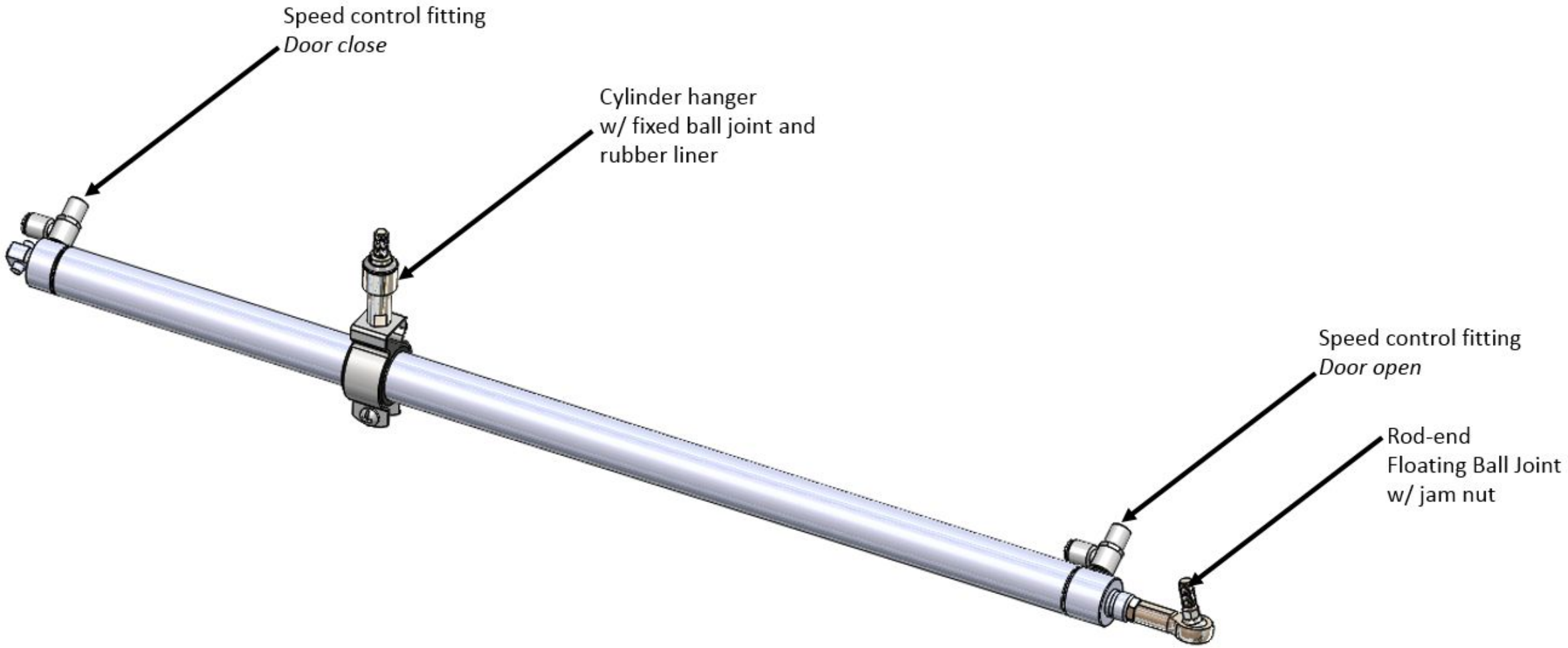

Installation - Determine Mounting Location

- Note: This step is best performed with two people
- Most installations will require the VersaDoor to be mounted on the outside of the CNC
- Once the mounting location has been determined, VersaDoor mounting brackets can be cut down to minimize interference or protrusion, if necessary
- Mounting location should be determined with the following considerations:
  - Safety of the operator
  - VersaDoor cylinder can travel freely through stroke without binding or contacting the CNC sheet metal
- VersaDoor comes with double-sided tape on the Mounting Brackets so that mounting locations can be tested before drilling
- Use isopropyl alcohol to clean the CNC mounting area before test fitting the Mounting Brackets
- The double-sided tape is good for two to three test locations, additional double-sided tape is provided

(continued on next page)

In these steps, hand-tighten all fasteners to allow for adjustment of location as you locate for optimal performance on your CNC

Installation - Determine Mounting Location

- The Mounting Bracket attached to the Fixed Ball Joint should be positioned so the Pneumatic Cylinder body is supported by the Fixed Ball Joint near the middle of the Pneumatic Cylinder body (see images on following pages)
- The Pneumatic Cylinder should be positioned within the Fixed Ball Joint so the end of the Pneumatic Cylinder body is positioned just past the edge of the door opening

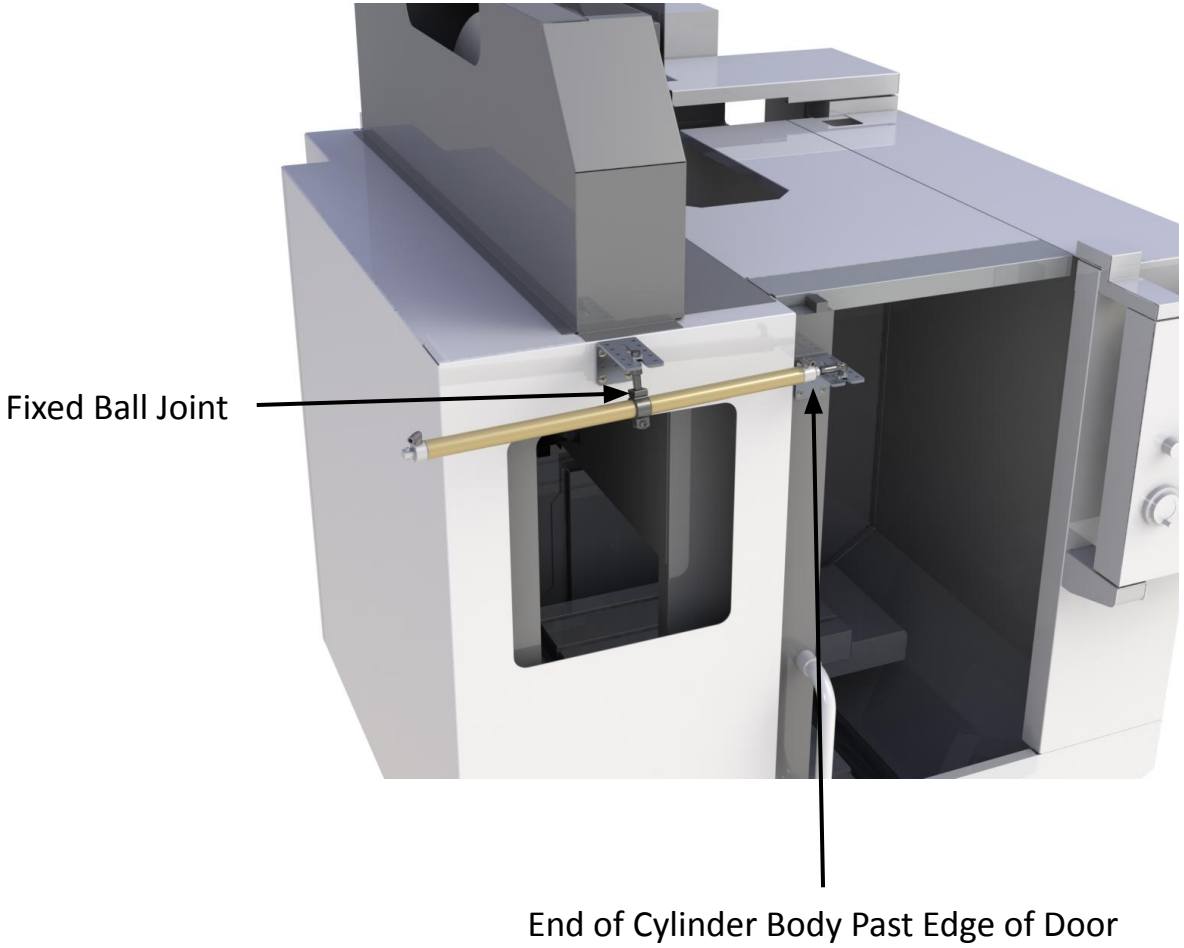

(continued on next page)

Installation - Determine Mounting Location

- Test the Mounting Bracket location by fully opening and closing the door
  - *No part of the cylinder should come in contact with the CNC*
- Only activate the door by hand when the VersaDoor assembly is mounted with double-sided tape
- When possible, mount brackets on top of the CNC away from where people could normally come in contact with the VersaDoor
- The bracket mounted on the door should not come in contact with the CNC enclosure when fully opened or closed
- If a Mounting Bracket must be mounted where it protrudes into the operator's work area, consider cutting the bracket down, and file to smooth any sharp edges
- Verify that there is room on the other side of the sheet metal from the Mounting Bracket location for the rivet head (protrudes about ⅛")
- If the Mounting Bracket needs to be removed for modification, use a marker to mark the position of the Mounting Bracket
- Typical mounting configurations are shown below:

Installation - Mounting Location Options

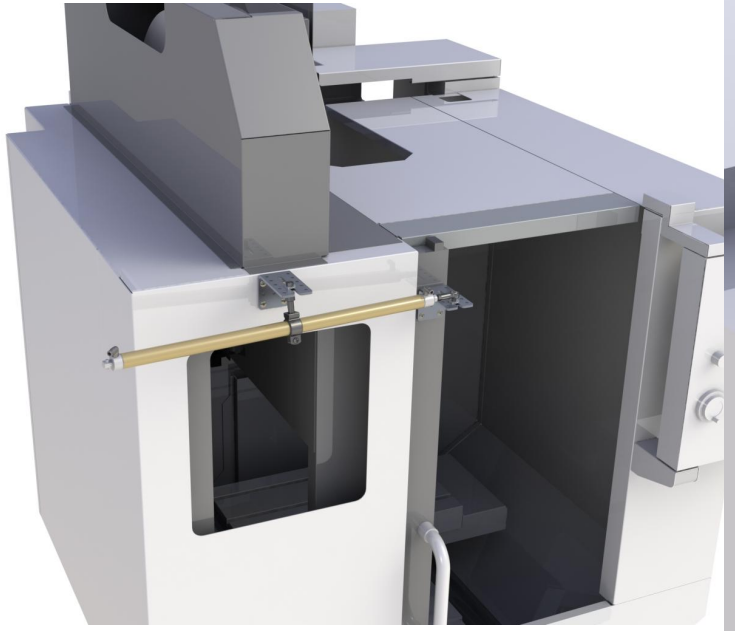

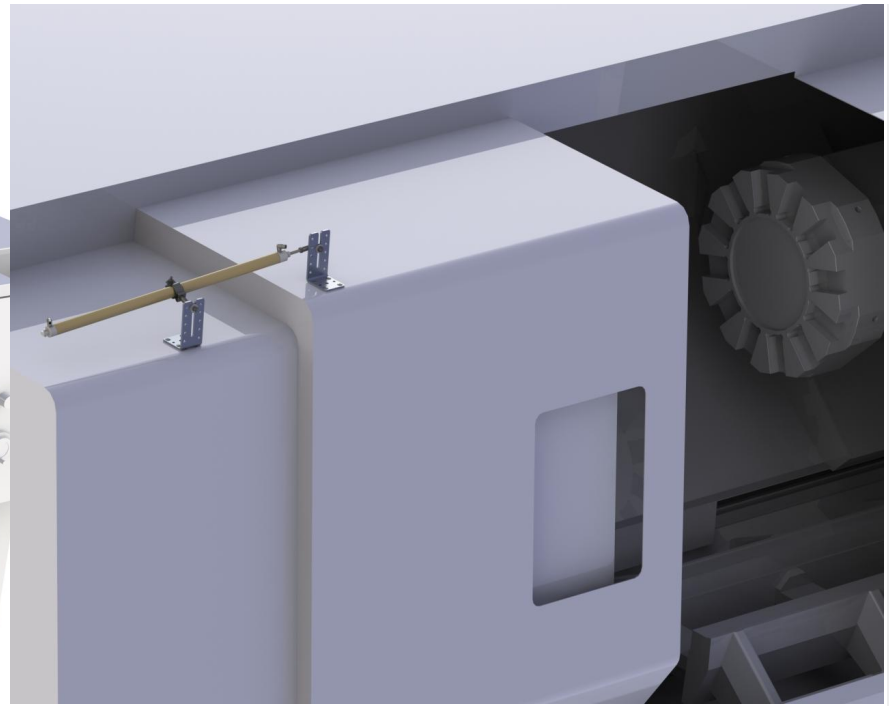

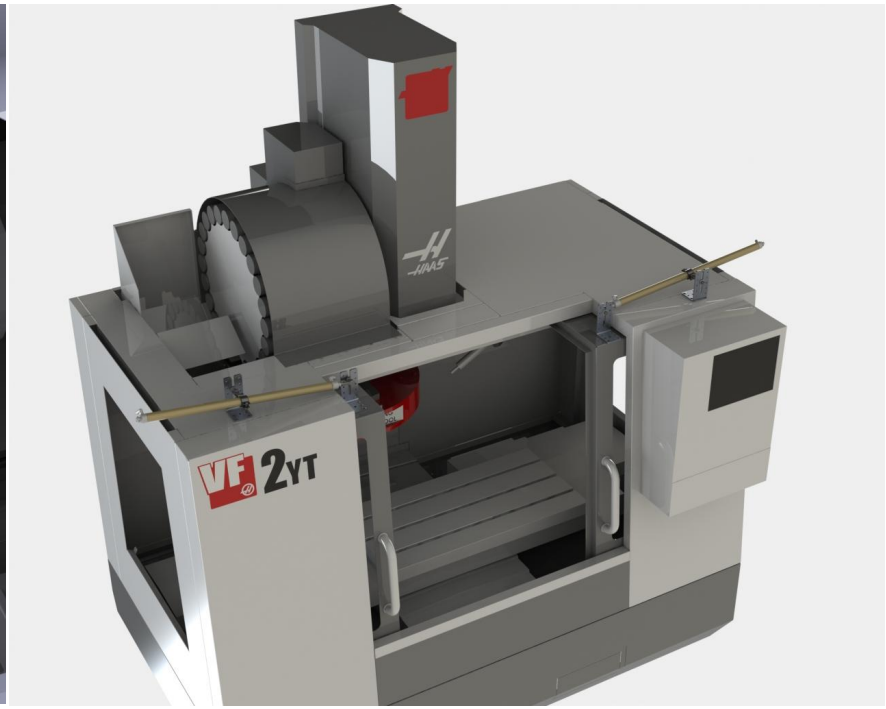

Installation - Alternative to using brackets

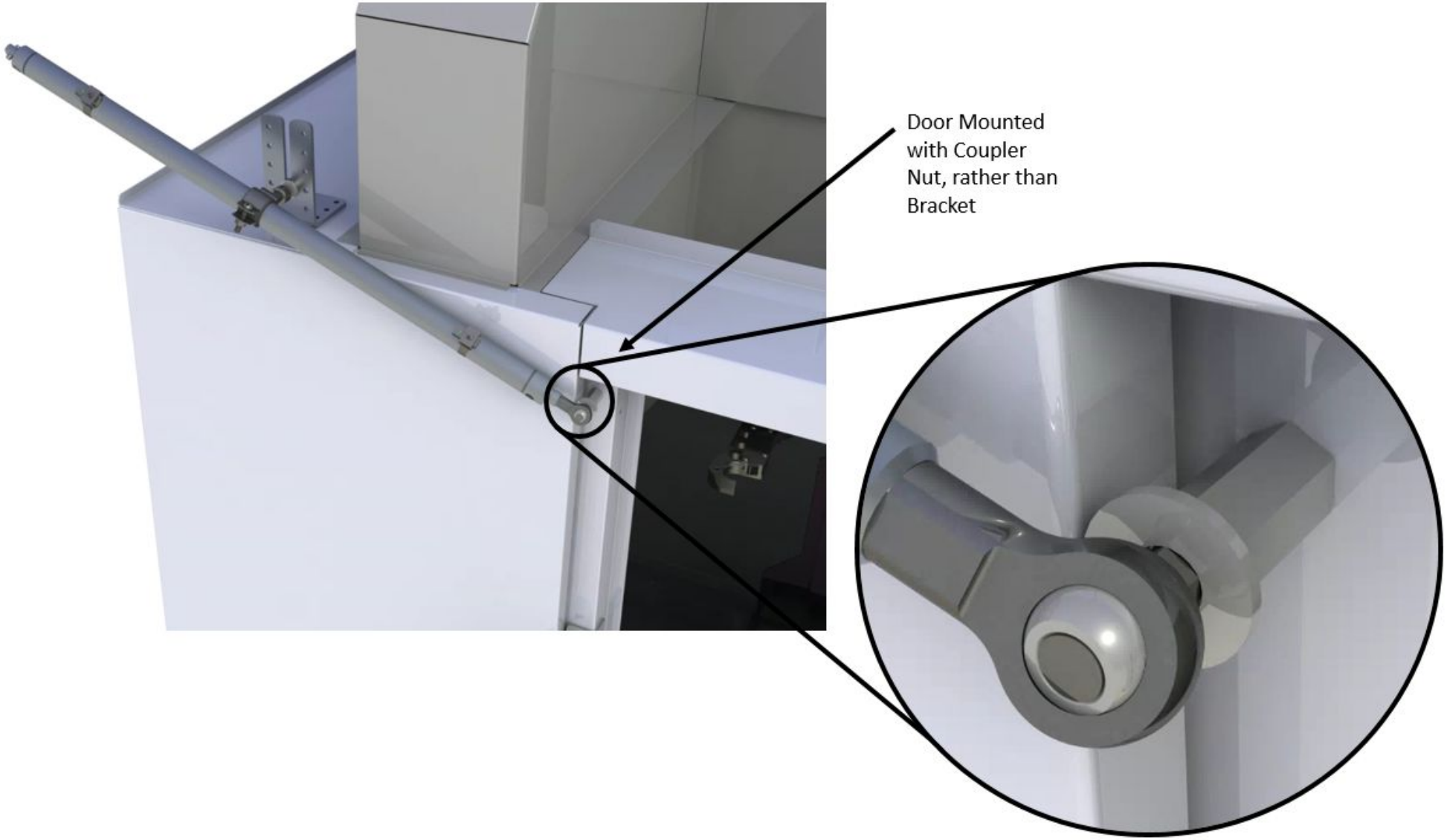

Installation - Install Brackets onto CNC

- Before starting this step, if the installation requires the trimming of a Mounting Bracket, make that modification first
- Using a ¼” drill bit, with the holes in the mounting bracket as the drill template, drill the first hole through the CNC sheet metal
- Take care not to damage anything on the other side of the sheet metal being drilled
- Install first rivet, before drilling next hole
- Install all four rivets per mounting bracket

Installation - Install and Route Pneumatic tubings

- **Green Tubing = Door Open**
- **Red Tubing = Door Closed**
- Route and connect supplied tubing to the push-to-connect fittings in the valves to the push-to-connect fitting attached to the 2 ends of the air cylinder(s).
- For a double door, route a length of tubing from each cylinder to a common location, cutting to length and inserting each tubing into a Tee and connecting remaining tubing length to Tee
- Route all tubings to the location of the pneumatic valves
    - Routing should include proximity to places where the tubing can be zip-tied to the CNC machine

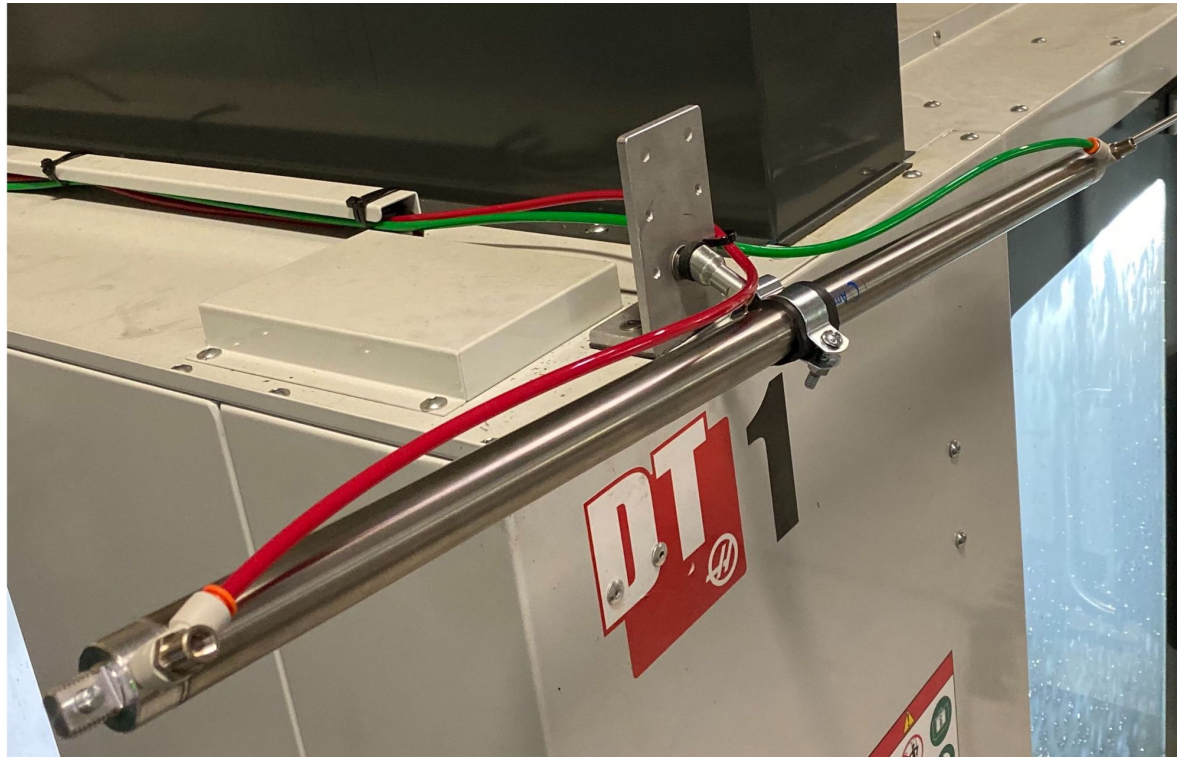

Installation - Install Pneumatic Valve Assembly

- Determine a suitable location for the Pneumatic Valve Assembly
  - The valves should be mounted on, in or near the automation system
  - Consider the routing of pneumatic lines and electrical signal lines when deciding on a location for the Pneumatic Valves
  - Secure the valves using zip-ties or by attaching the DIN rail to sheet metal on the automation system
  - Attach the green door open pneumatic tubing to the door open solenoid and the red door close pneumatic tubing to the door close solenoid
  - Use the yellow pneumatic tubing to connect the shop air supply to the Pneumatic Valve pressure regulator input

Installation - Wire Electrical Signals

- The VersaDoor is actuated via two +24VDC digital I/O signals
- One signal is used to actuate the open side and one signal actuates the close side
- +24VDC actuates a valve, 0V deactuates a valve
- When both digital I/O signals are set to 0V, the valves “float” and the door can be opened and closed manually via the door handle
- The wiring diagram for the circuit is included on the following page
- Consult your automation system documentation for information on how to connect the VersaDoor electrical signals to your automation system’s digital IO and how to control the digital IO
- Read and follow the Integration with Automation section below

Validate Performance and Safety of VersaDoor

1. Validate CNC door interlock
   a. Select a CNC program that will not cause harm to the operator if the door is open and will not cause harm to the CNC if the program executes
   b. Put the CNC control in a state that should cause the program to execute when the cycle start button is pressed
   c. Open the CNC door
   d. Press the cycle start button, ensure the CNC program does not execute
   e. Close the CNC door
   f. Press the cycle start button
   g. While the CNC is running, attempt to open the CNC door using the door handle; ensure the door is locked and will not open

Warning: do not operate the CNC without a functioning CNC door interlock

Validate Performance and Safety of VersaDoor

2. Adjust and Validate VersaDoor Speed
   a. Using the provided speed control tool, turn each adjuster clockwise all the way in and then back out about ½ turn
   b. Measure the total stroke of the door using a tape measure
   c. With a stopwatch at hand, actuate the door noting how much time it takes the door to fully actuate
   d. The door should move no faster than 6” (150mm) per second
   e. Turn the adjuster on the speed control until the door speed is less than 6” per second
   f. Place the speed control tool in a safe place away from the VersaDoor installation

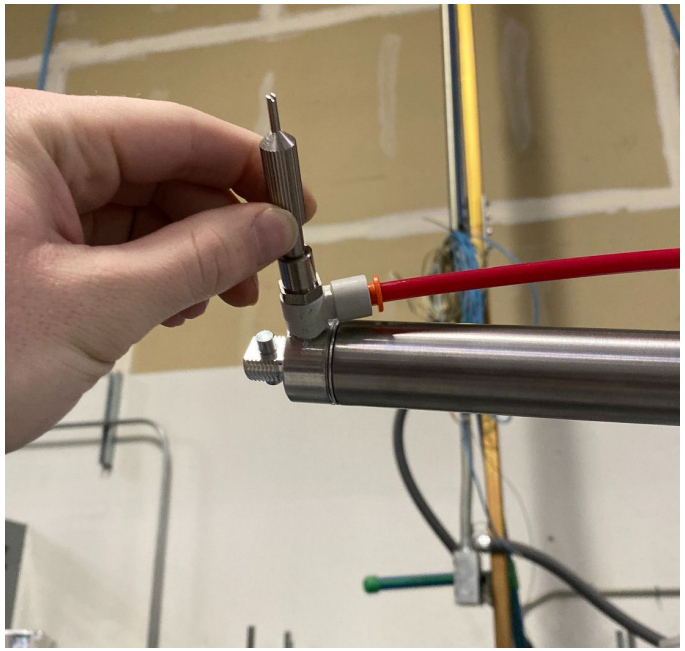

Note: always adjust both speed control valves equally when making adjustments for open or close

Validate Performance and Safety of VersaDoor

2. Validate VersaDoor Actuation Force (door close)
   a. Use the automation system digital I/O to activate the VersaDoor close
   b. With the digital I/O for the close active and the Pneumatic Cylinder pressurized, use the door handle to attempt to open the door
   c. An operator should be able to push the door away from the closed position with about 25 pounds of force

      WARNING: do not attempt to move the door more than 2” from the closed position, do not attempt to apply more than 30 pounds of force to the door or damage to the actuator may occur
   d. If the force required to move the door is higher than 25 pounds, the pressure regulator may be installed backwards or may be defective, do not operate the VersaDoor until the problem is resolved
      i. If necessary, insert a pressure gauge between the Pneumatic Valves and the Pneumatic Cylinder; verify the pressure is less than 35psi

Integration with Automation

- How the VersaDoor is controlled by the automation system is critical to the safety of the system
- If pneumatic pressure is held continuously, an operator could be trapped by the VersaDoor
- After the door speed and force have been set and validated according to the preceding instructions, measure the amount of time it takes to open the door and close the door
- In the automation system, configure the open/close door commands to set the door IO signal for the time measured to open/close the door plus a few more seconds
- If using a VersaBuilt Door Sensor Kit, follow the instructions in that kit for configuring the open/close door commands
- **WARNING:** To prevent the possibility of an injury, pneumatic pressure should never be applied to the VersaDoor for longer than is necessary to open or close the CNC door

Integration with Automation

- For best performance, regular cleaning and removal of debris on or around the CNC door and door rails inside the CNC is necessary.

- Tip:
  - Connect tubing and nozzles to the CNC's coolant pump to wash the CNC Door and rails during machining. See example picture of a Haas DT-1 with wash nozzle on the following page.

Single Door Pneumatic Schematic

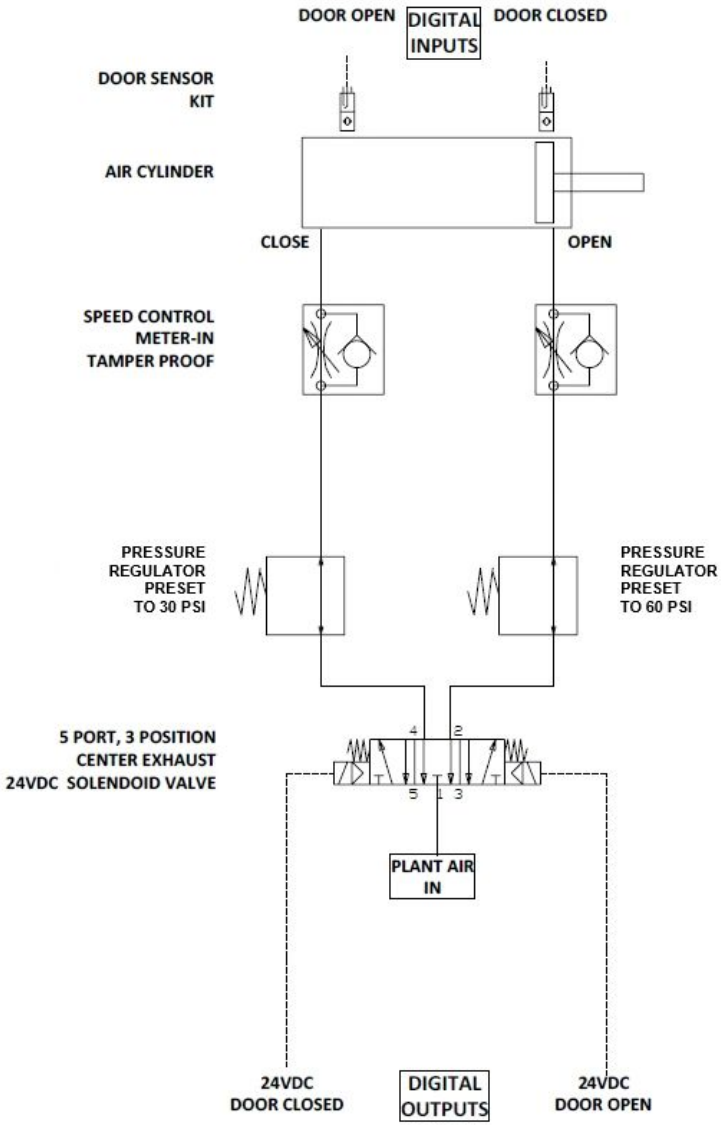

Double Door Pneumatic Schematic

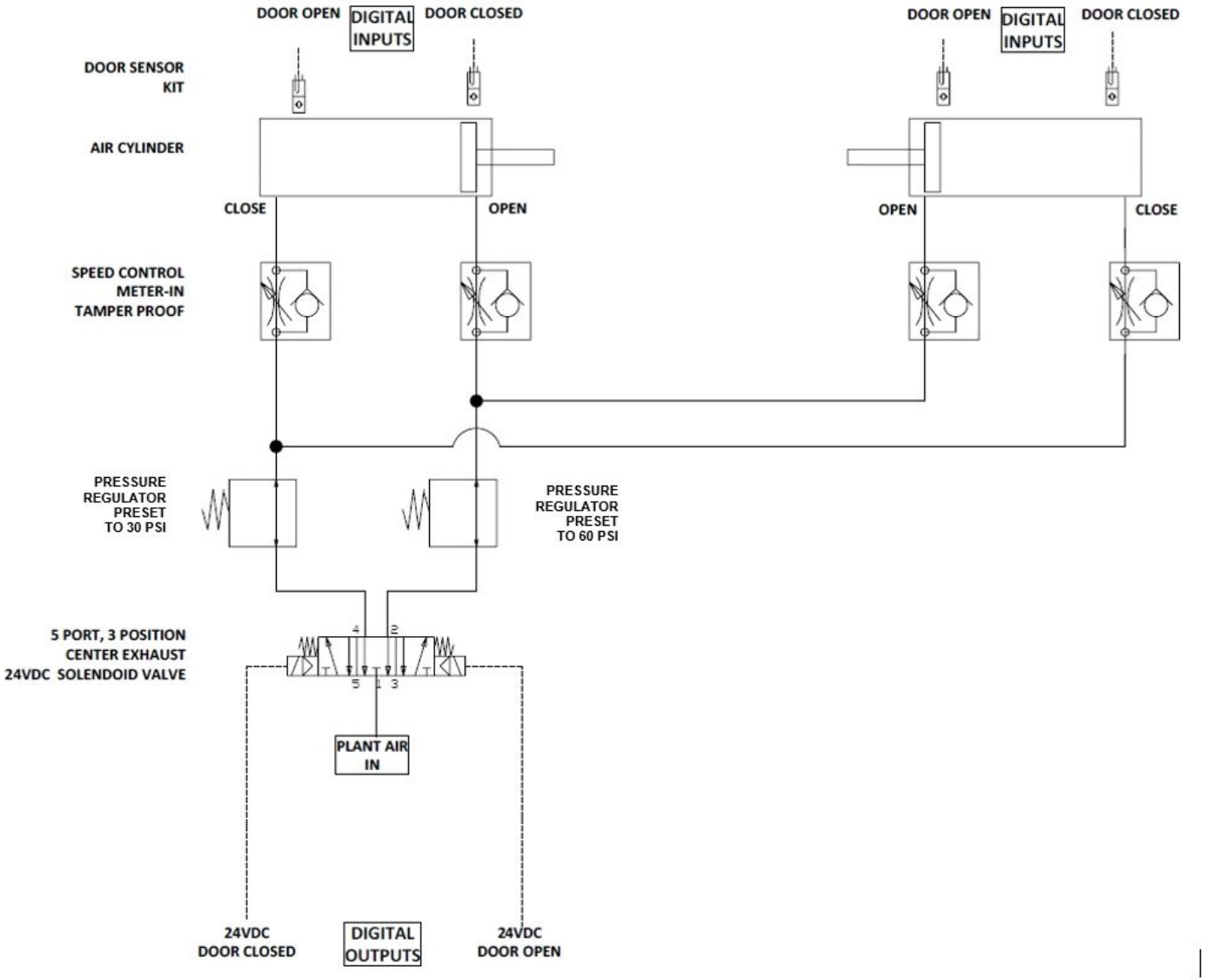

Integration with Automation

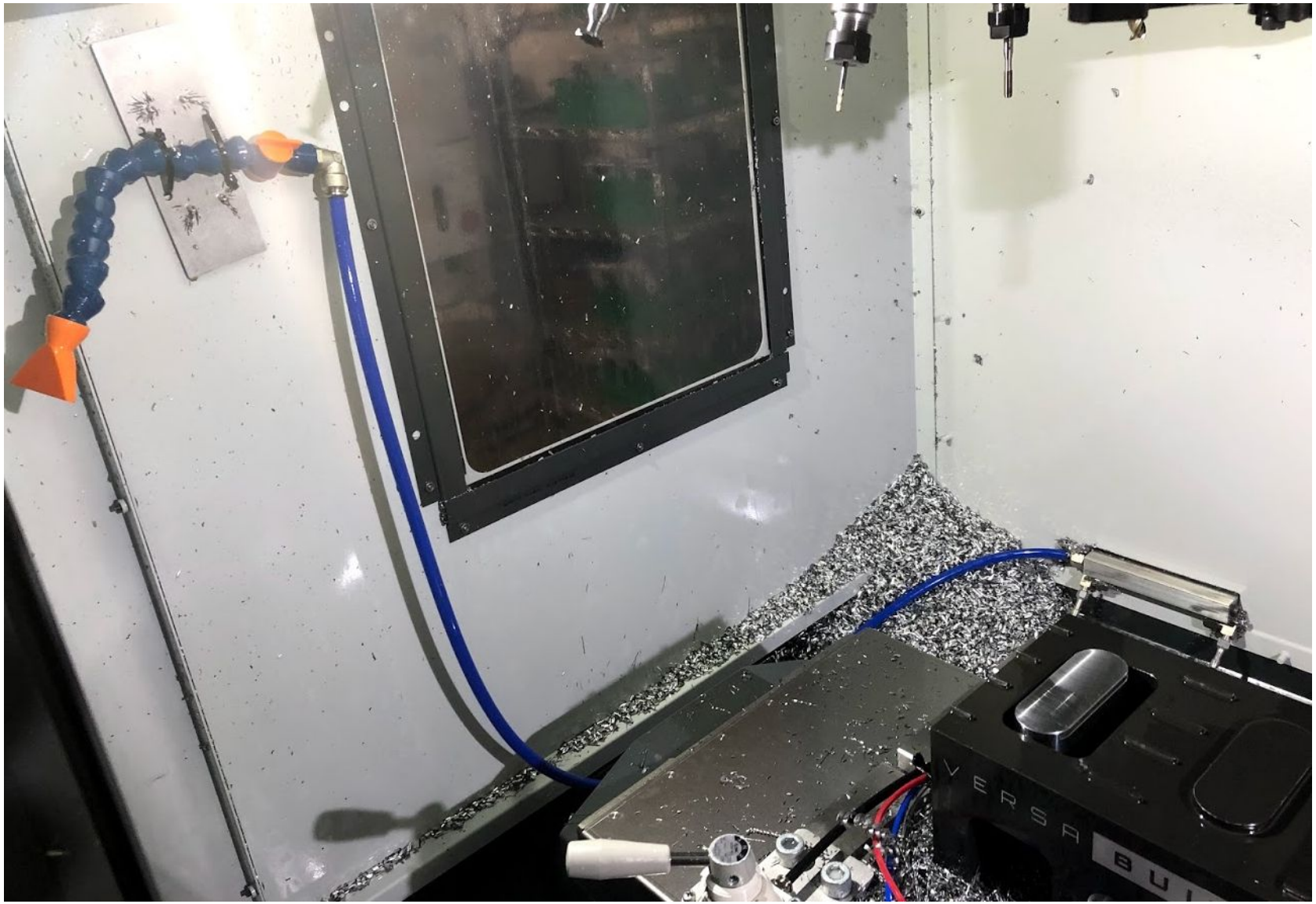

Door wash nozzle inside Haas DT-1

Haas VF Series Double Doors

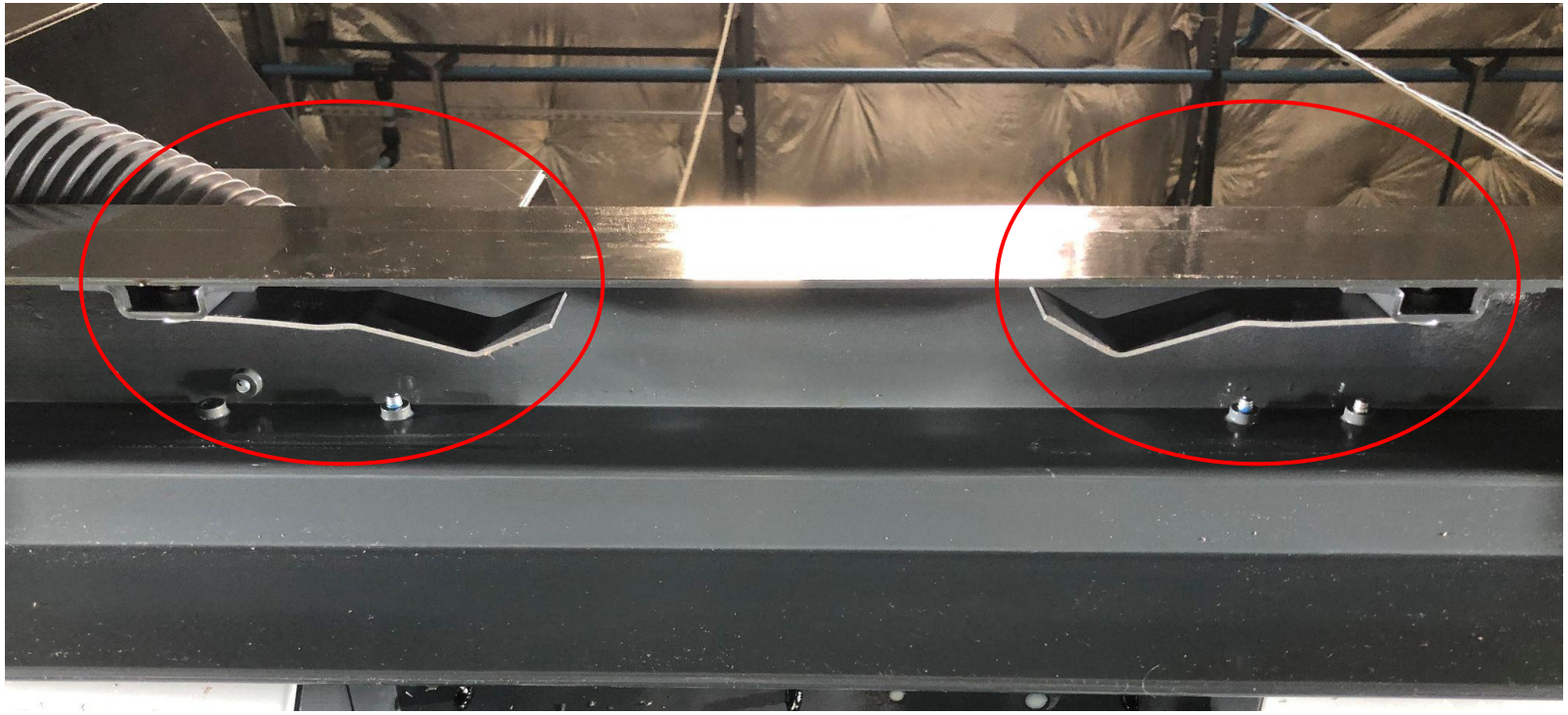

Door pressure is regulated to a maximum of 30 PSI. Air flow control fittings sit at the air inputs of each cylinder, the air flow is what controls the speed of the doors. For double door openers on Haas it is recommended to have similar speeds for door close and door open so that there is minimal potential to bounce out of center.

Haas double doors have door brackets (circled in red) that can be too rigid for the air pressure to consistently overcome. If this occurs, remove the brackets and bend slightly to reduce the force required to close the CNC door

VERSA BUILT ROBOTICS

VersaDoor

Installation & User Manual