Lathe Automation System

Complete CNC Automation Product with UR10e Robot Starting at $74,995

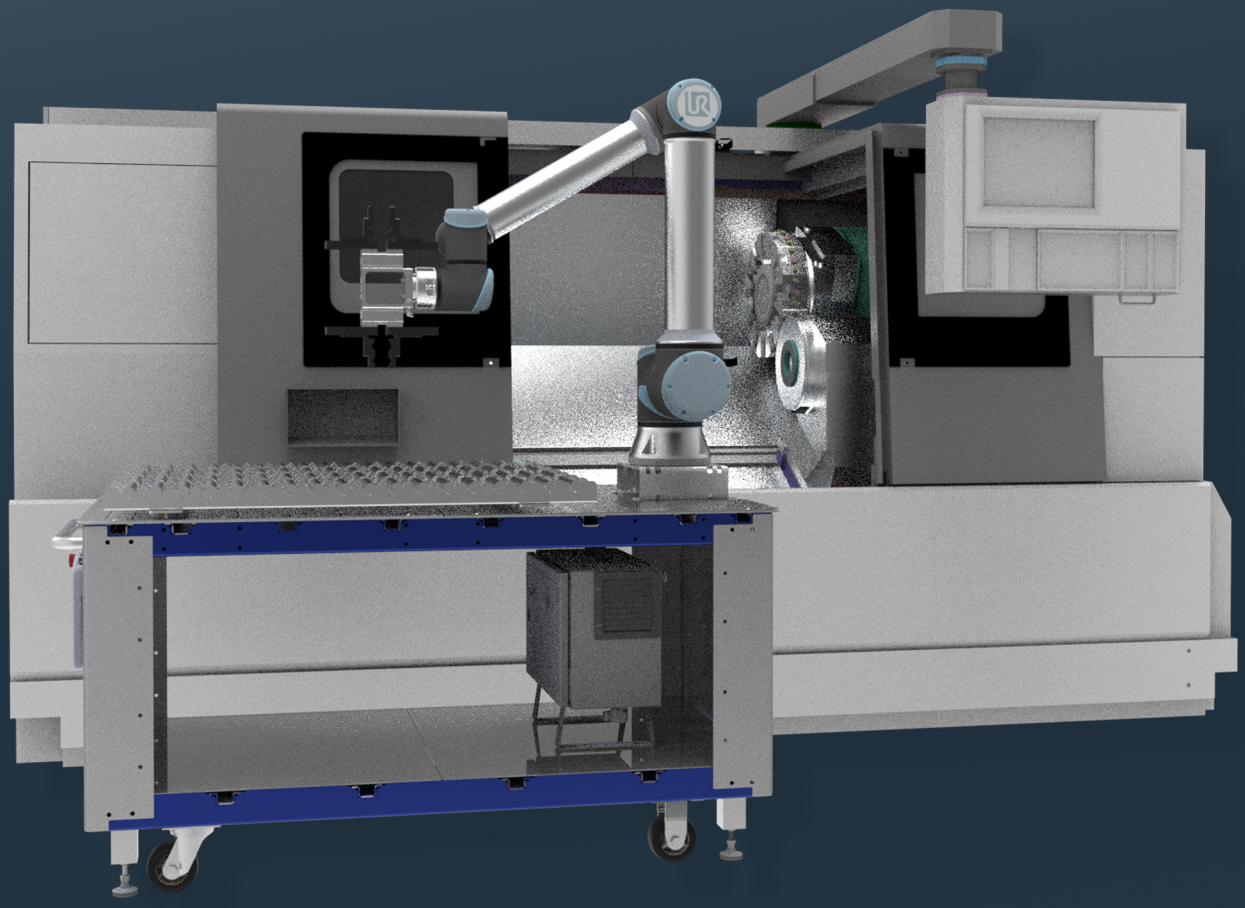

Pre-Programmed Pre-Integrated

Plug and play for CNC manufacturing

Control robot and add new parts to the system using a tablet or laptop

Install in 2 days

Systems are in-stock and ready to be installed - 2 week lead time from order

Install systems on your own or have a skilled technician come out
System is ready to make parts in 2 days

Lower Costs

All-in price 20-45% less than competitors

Optimize operator and spindle utilization

Low cost part integration

Expert Support

Unmatched system support via phone and email

Remote connectivity allows VersaBuilt team to find the problem, and fix quickly to get you back up and running

Elevate Labor

Elevate the culture of your company by letting the robot do dull, dirty, and dangerous jobs so operators can be engaged in higher value work

Lathe Automation System Data Sheet

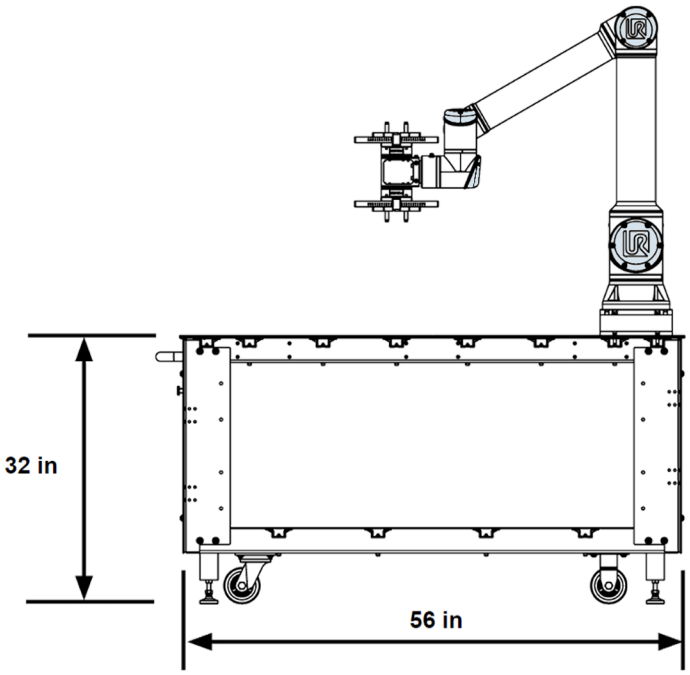

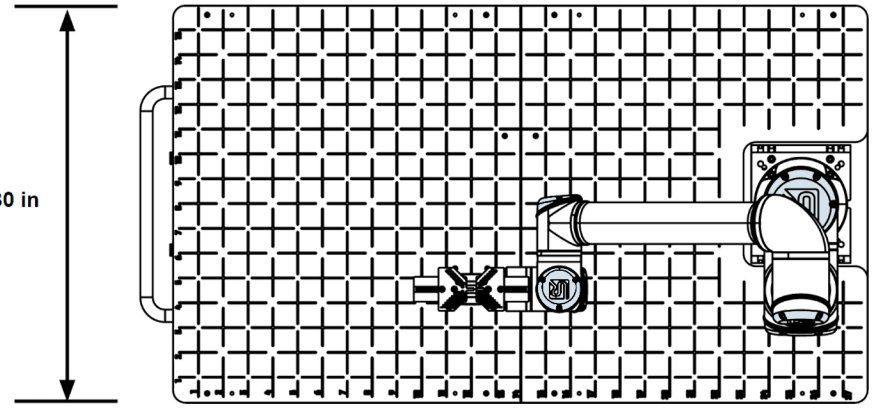

Hardware Included **UR10e can be sold separately or system can use an existing UR10e*	UR10e Robot	VersaBuilt System Controller
	VersaCart	Electrical Signal Cables
	DuoGrip Gripper	Pneumatic Valves & Tubing
User Interface	Web based application, connected via Wi-Fi or network Phone, Tablet, Laptop or Computer *customer provided	
Part Sizes	Puck - 0.50 to 8.00 inch Max Diameter; Shaft - 0.25 to 3.00 inch Max Diameter	
Part Weight	9.5 lbs Max (Dual part loading); 19 lbs. Max (Single part loading)	
Infeed Capacity Examples	Part size Diameter	Part capacity
	1.75 Inches	288 parts
	3.75 Inches	72 parts
	5.75 Inches	30 parts
	7.75 Inches	16 parts
Portability	VersaCart on Casters with adjustable footpads to set position *optional floor anchors available	
Processes Included	1 and 2 Operation; Dual Spindle, 1 and 2 Operation; Part unload only (Single or Dual Spindle)	
Air Requirements	90-120 psi, 15-20 scfm *air should be conditioned to meet ISO 8573-1:2010 [7:4:4] standard	
Electrical Requirements	120VAC 1 Phase, 50/60Hz, Full Load 15A (Robot, Controls)	
Optional Accessories	VersaDoor	Shaft Infeed
	Z Push Tool	Shaft Picking Fingers
	Oversized Infeed	VersaBlast

LEARN MORE

To learn more about the CNC Lathe Automation System go to www.VersaBuilt.com. There you will find videos showing the CNC Lathe Automation System in action, manuals, and details on pricing and options.